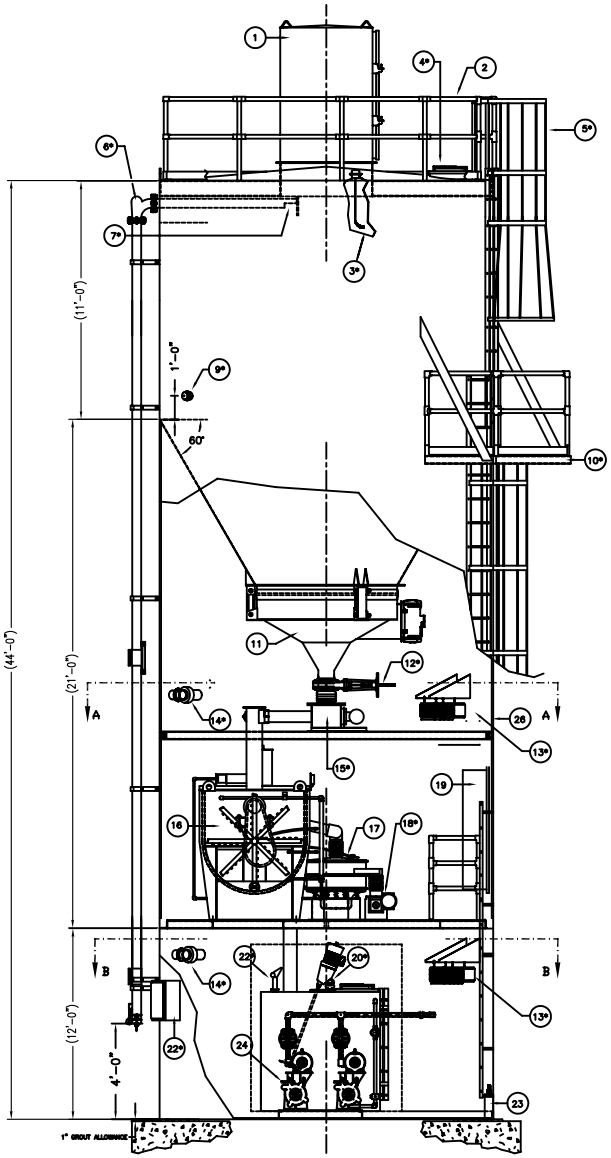


ELEVATION (LOOKING EAST)

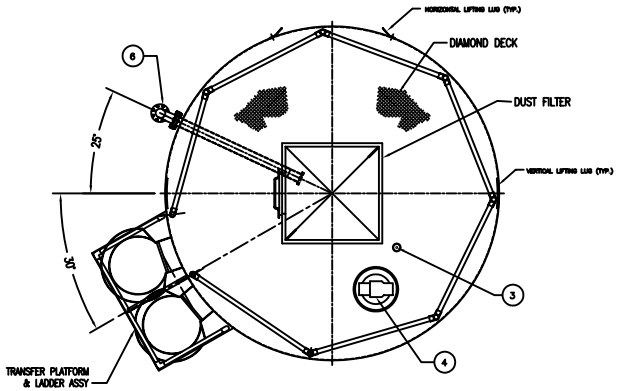


ROOF PLAN

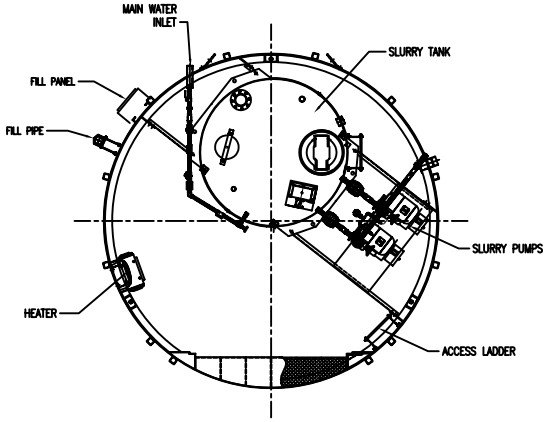


PUMP LEVEL PLAN
SECTION "B-B"

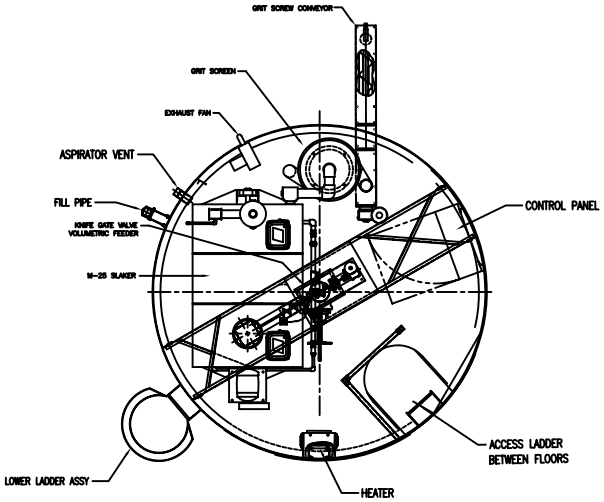


SLAKER LEVEL PLAN
SECTION "A-A"

| NO. | QTY. | DESCRIPTION, TAG NUMBER |
|---|---|---|
| 1 | 1 | DUST COLLECTOR |
| 2 | 1 | HANDRAIL & TOEPLATE ASSY. |
| 3 | 1 | HIGH BIN LEVEL SWITCH |
| 4 | 1 | MANWAY W/PRESSURE-VACUUM RELIEF VALVE |
| 5 | 1 | LADDER & CAGE ASSY. |
| 6 | 1 | VORTICE ELBOW |
| 7 | 1 | MATERIAL DEFLECTOR |
| 8 | – | |
| 9 | 1 | LOW BIN LEVEL SWITCH |
| 10 | 1 | TRANSFER PLATFORM |
| 11 | 1 | BIN ACTIVATOR |
| 12 | 1 | KNIFE GATE VALVE |
| 13 | 2 | HEATER, A&B |
| 14 | 2 | ROOM EXHAUST FAN, A&B |
| 15 | 1 | VOLUMETRIC FEEDER |
| 16 | 1 | M-25 SLAKER |
| 17 | 1 | GRIT SCREEN |
| 18 | 1 | GRIT SCREW CONVEYOR |
| 19 | 1 | CONTROL PANEL |
| 20 | 1 | AGITATOR, MIXER |
| 21 | – | |
| 22 | 1 | FILL PANEL |
| 23 | 12 | ANCHOR BOLT STIRRUP |
| 24 | 2 | SLURRY PUMP |
| 25 | 1 | ULTRASONIC LEVEL SENSOR |
| 26 | – | |
| 27 | – | |
| 28 | – | |

* SHOWN OUT OF POSITION FOR CLARITY. REFER TO PLAN VIEWS FOR ACTUAL ORIENTATION/LOCATION.

**NOTICE**

THIS PRINT IS THE PROPERTY OF ZMI AND IS SUBJECT TO RECALL AT ANY TIME, AND IS NOT TO BE USED IN ANY WAY DETRIMENTAL TO THEIR INTEREST.

TOLERANCES – UNLESS NOTED

BETWEEN FINISH SURFACES:
FRACTIONAL: ± 1/64"
DECIMAL: ± .010"

DETAIL DIMENSIONS: ± 1/16"

REVISIONS AND PATTERN CHANGES

| NO | REVISION | DATE | BY |
|---|---|---|---|
| | | | |

ZMI/ PORTEC CHEMICAL PROCESSING PRODUCTS
P.O. BOX 274, SIBLEY IOWA 51249

| DRAWN | CHECKED | STRUCTURAL APPROVAL | J.O. |
|---|---|---|---|
| BAL | | | STD |
| DATE 09/08/03 | DATE | DATE | P.O. |

TITLE GENERAL ARRANGEMENT
#14' X 40' SILO QL, 1,500 CU.FT. w/M-25 SLAKER

DISK NUMBER / BOM NO. | SCALE 3/8"=1'-0"

DRAWING NUMBER
308090-D